ECU Throttle Body

Harness Required: E22 Ver 1.0 & E21 Ver 1.0

Last Changed: 28/05/2012
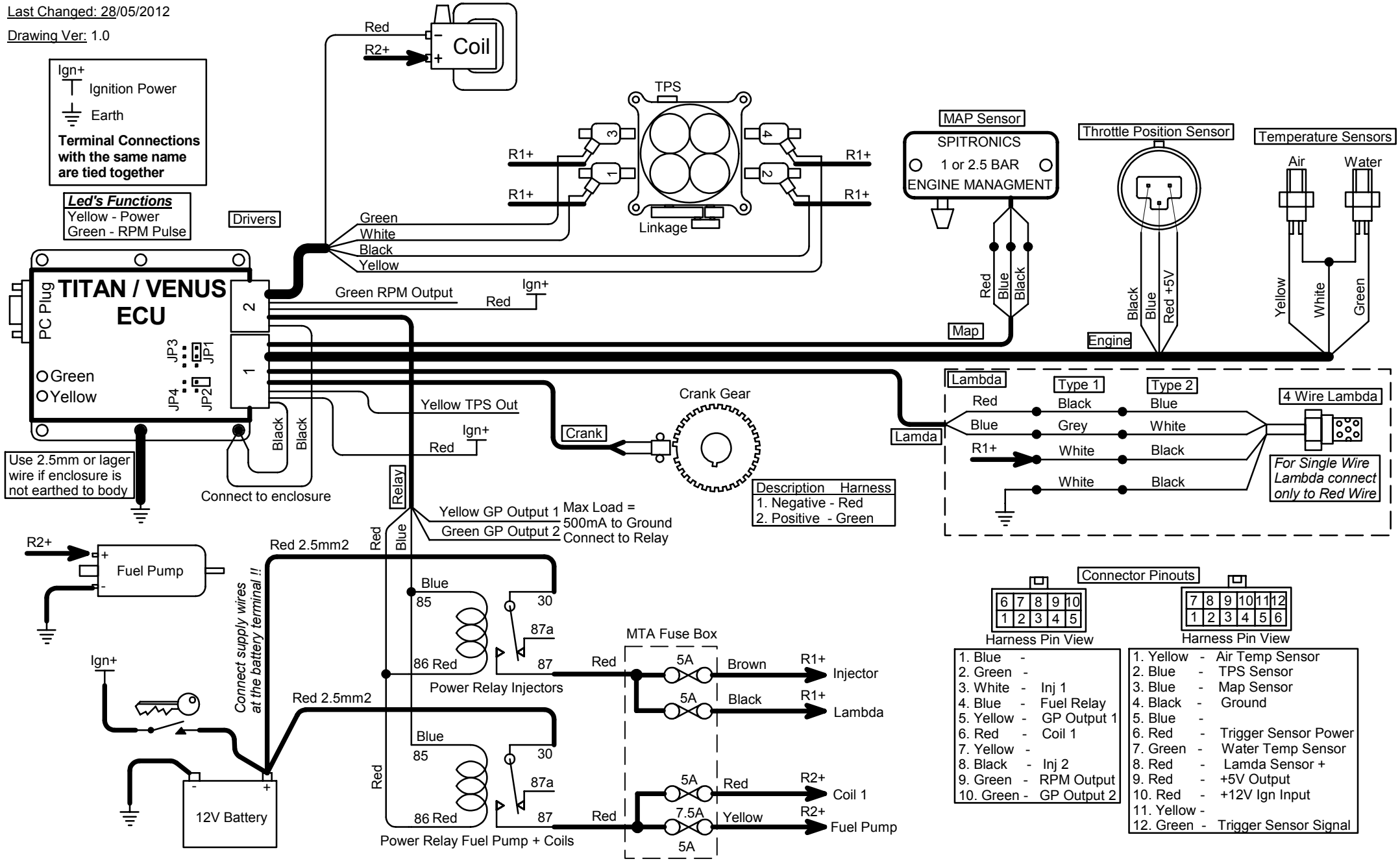
Drawing Ver: 1.0